Topology Convergence (I)

- The convergence process begins with the root switch broadcasting BPDUs indicating a minimum root path cost equal to zero.

- Each switch repeats this frame and adds the cost of the connection from itself to the root. From all the ports of a switch receiving BPDUs, the one that receives the frame with the minimum cost is considered to be the root port. This port is placed in the forwarding state and all other ports in the blocking state. The other ports in the switch are called designated ports.

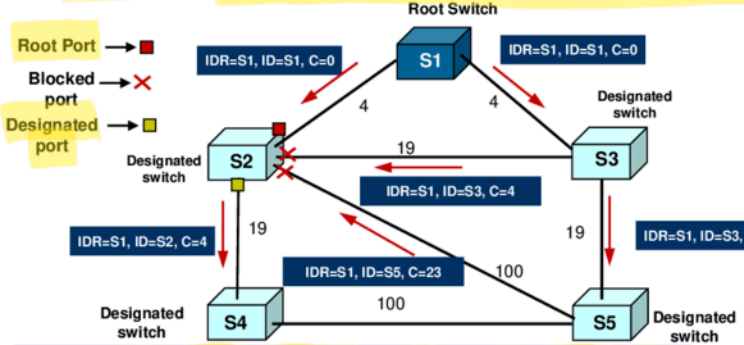

S2 receives BPDUs through three ports. In one port the frame indicates C=0, and in the others C=4 and C=23. As the consequence the first port is a root port and the others are blocked ports.

When a *switch* receives in two ports frames with identical costs, it chooses as the root port the one that receives the frame with the lowest switch ID, in order to break the tie.

When a *switch* receives in two ports frames with identical costs, and identical IDs, the tie breaker is the lowest sender port ID.